METALAIRE

Submittal: AFLC-AA
Architectural Formations Linear Diffusers
Exposed Face

Model: AFLC-AA Concealed Mounting - Border A & Border A - Exposed Face

AFLC-AA - Exposed Face

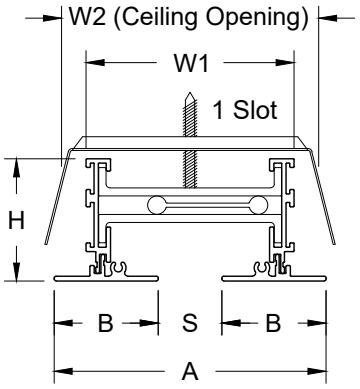

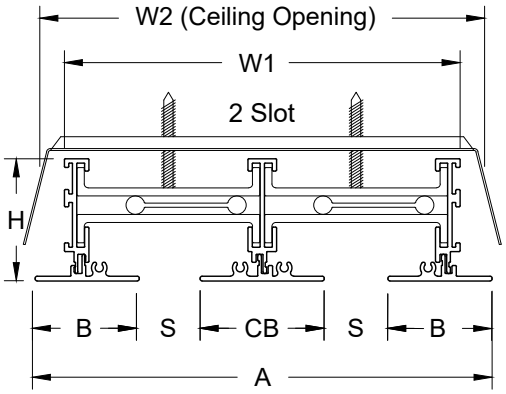

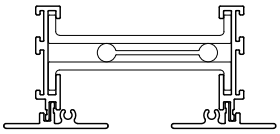

Standard Blade

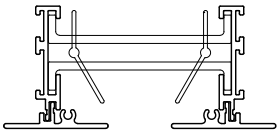

Combo Blades

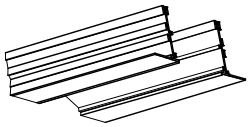

Open End

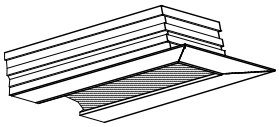

Mitered Border

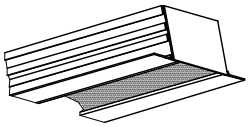

End Cap

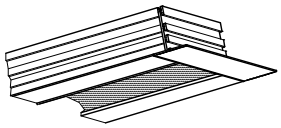

End Border

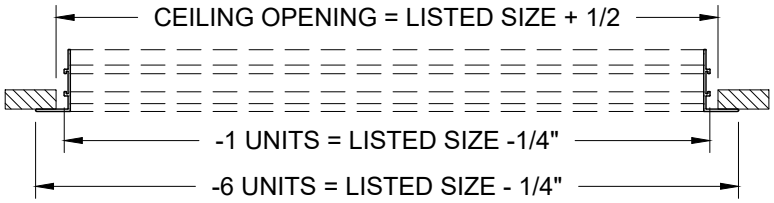

		Face Width		Neck Width						
Model	S	A	A	W1	W2	W1	W2	B	CB	H
	Slot Width	1 Slot	2 Slot	1 Slot	1 Slot	2 Slot	2 Slot	Border Width	Border Width	Height
AFLC-10	1	4 1/4	7 3/16	3 1/4	4	6 3/16	6 15/16	1 5/8	1 15/16	2
AFLC-15	1 1/2	4 3/4	8 3/16	3 3/4	4 1/2	7 3/16	7 15/16	1 5/8	1 15/16	2
AFLC-20	2	5 1/4	9 3/16	4 1/4	5	8 3/16	8 15/16	1 5/8	1 15/16	2
AFLC-25	2 1/2	6 3/4	12 3/16	5 3/4	6 1/2	11 3/16	11 15/16	2 1/8	2 15/16	2 1/2
AFLC-30	3	7 1/4	13 3/16	6 1/4	7	12 3/16	12 15/16	2 1/8	2 15/16	2 1/2

1. Available Finishes

Standard Finish:
- 02 - Satin Silver Face and Black Interior
- 03 - Black Face and Black Interior
- 20 - White Face and Black Interior
- 28 - Custom Face Color and Black Interior

Optional Finish:
- 28 - Custom Face Color and Black Interior

2. Available Accessories

3. Available Options

- 1EC - (1) End Cap
- 2EC - (2) End Caps
- 1EB - (1) End Border
- 2EB - (2) End Borders
- OO - Open / Open
- MM - Mitered / Mitered
- MO - Mitered / Open

4. Construction Details

- Material: Extruded Aluminum
- C - Combo Pattern Controller
- S - Standard Pattern Controller
- Standard Single Section size: (12" minimum - 72" maximum)
- Lengths larger than 72" made in multiple sections

All Dimensions ±1/16"

Metal Industries 1985 Carroll Street, Clearwater, FL 33765 Phone: 727.441.2651 www.Metalaire.com

Model: AFLC-AC Concealed Mounting - Border A & Borders C - Exposed Face & Concealed Tape and Spackle

AFLC-AC - Exposed Face & Concealed Tape and Spackle

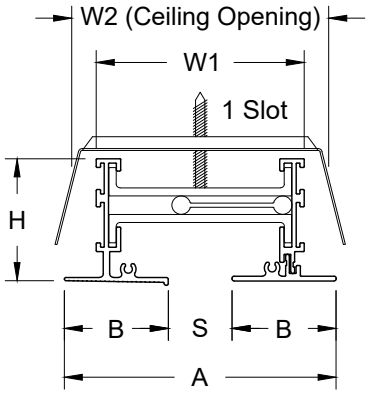

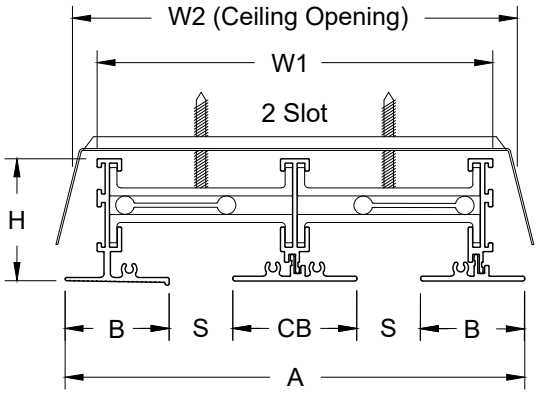

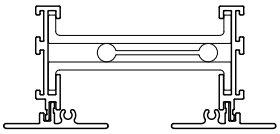

Standard Blade

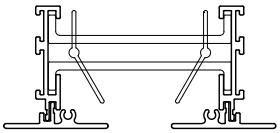

Combo Blades

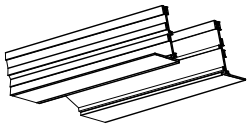

Open End

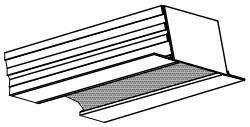

End Cap

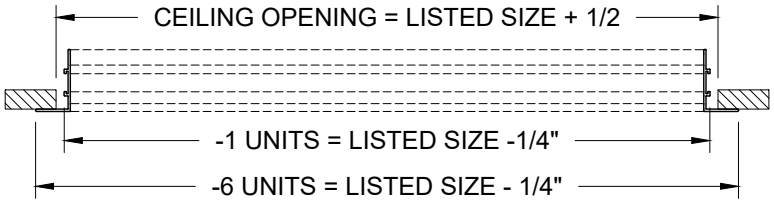

Model	S	Face Width A	Face Width A	Neck Width W1	Neck Width W2	W1	W2	B	CB	H
	Slot Width	1 Slot	2 Slot	1 Slot	1 Slot	2 Slot	2 Slot	Border Width	Border Width	Height
AFLC-10	1	4 1/4	7 3/16	3 1/4	4	6 3/16	6 15/16	1 5/8	1 15/16	2
AFLC-15	1 1/2	4 3/4	8 3/16	3 3/4	4 1/2	7 3/16	7 15/16	1 5/8	1 15/16	2
AFLC-20	2	5 1/4	9 3/16	4 1/4	5	8 3/16	8 15/16	1 5/8	1 15/16	2
AFLC-25	2 1/2	6 3/4	12 3/16	5 3/4	6 1/2	11 3/16	11 15/16	2 1/8	2 15/16	2 1/2
AFLC-30	3	7 1/4	13 3/16	6 1/4	7	12 3/16	12 15/16	2 1/8	2 15/16	2 1/2

1. Available Finishes

Standard Finish:
- 02 - Satin Silver Face and Black Interior
- 03 - Black Face and Black Interior
- 20 - White Face and Black Interior
- 28 - Custom Face Color and Black Interior

Optional Finish:
- 28 - Custom Face Color and Black Interior

2. Available Accessories

3. Available Options

- 1EC - (1) End Cap
- 2EC - (2) End Caps
- OO - Open / Open

4. Construction Details

- Material: Extruded Aluminum
- C - Combo Pattern Controller
- S - Standard Pattern Controller
- Standard Single Section size: (12" minimum - 72" maximum)
- Lengths larger than 72" made in multiple sections

All Dimensions ±1/16"

Metal Industries 1985 Carroll Street, Clearwater, FL 33765 Phone: 727.441.2651 www.Metalaire.com

Model: AFLC-CC Concealed Mounting - Border C & Border C - Concealed Tape and Spackle

AFLC-CC - Concealed Tape and Spackle

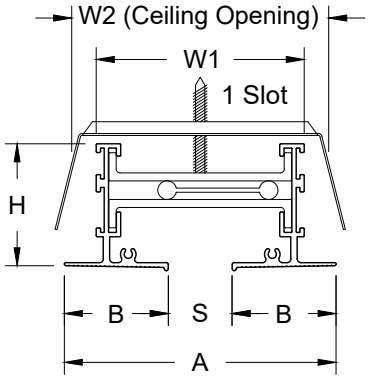

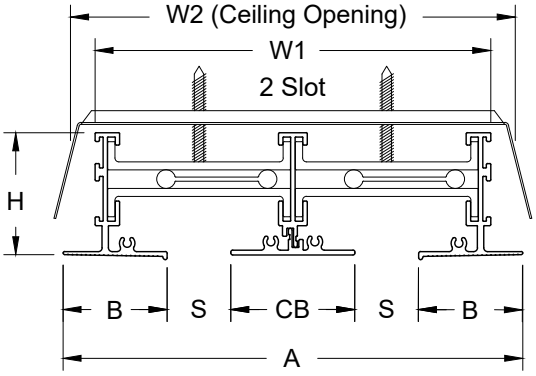

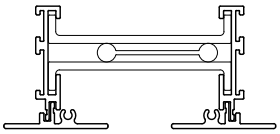

Standard Blade

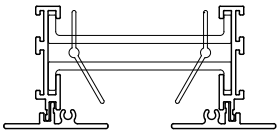

Combo Blades

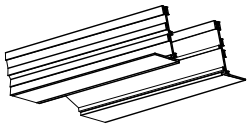

Open End

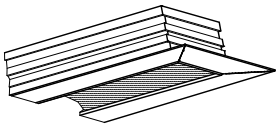

Mitered Border

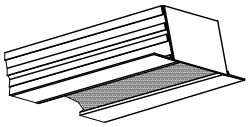

End Cap

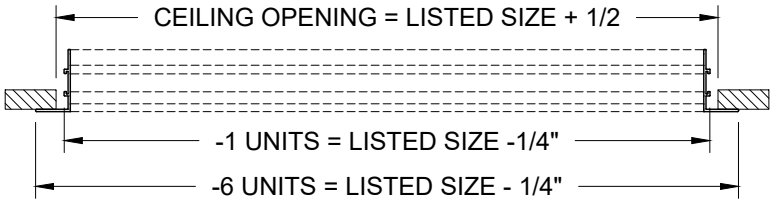

		Face Width		Neck Width						
Model	S	A	A	W1	W2	W1	W2	B	CB	H
	Slot Width	1 Slot	2 Slot	1 Slot	1 Slot	2 Slot	2 Slot	Border Width	Border Width	Height
AFLC-10	1	4 1/4	7 3/16	3 1/4	4	6 3/16	6 15/16	1 5/8	1 15/16	2
AFLC-15	1 1/2	4 3/4	8 3/16	3 3/4	4 1/2	7 3/16	7 15/16	1 5/8	1 15/16	2
AFLC-20	2	5 1/4	9 3/16	4 1/4	5	8 3/16	8 15/16	1 5/8	1 15/16	2
AFLC-25	2 1/2	6 3/4	12 3/16	5 3/4	6 1/2	11 3/16	11 15/16	2 1/8	2 15/16	2 1/2
AFLC-30	3	7 1/4	13 3/16	6 1/4	7	12 3/16	12 15/16	2 1/8	2 15/16	2 1/2

1. Available Finishes

Standard Finish:
- 02 - Satin Silver Face and Black Interior
- 03 - Black Face and Black Interior
- 20 - White Face and Black Interior
- 28 - Custom Face Color and Black Interior

Optional Finish:
- 28 - Custom Face Color and Black Interior

2. Available Accessories

3. Available Options

- 1EC - (1) End Cap
- 2EC - (2) End Caps
- OO - Open / Open
- MM - Mitered / Mitered
- MO - Mitered / Open

4. Construction Details

- Material: Extruded Aluminum
- C - Combo Pattern Controller
- S - Standard Pattern Controller
- Standard Single Section size: (12" minimum - 72" maximum)
- Lengths larger than 72" made in multiple sections

All Dimensions ±1/16"

Metal Industries 1985 Carroll Street, Clearwater, FL 33765 Phone: 727.441.2651 www.Metalaire.com